GREYSTONE
ENERGY SYSTEMS INC

STAINLESS STEEL SURFACE TEMPERATURE SENSOR

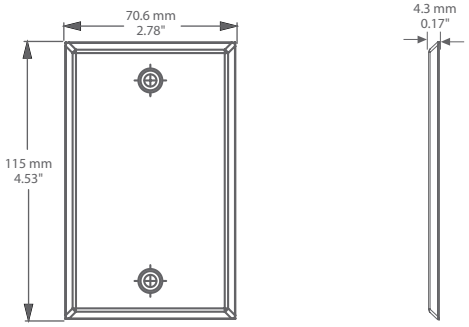

TE200AS SERIES

PRODUCT DESCRIPTION

The TE200AS series is a single gang, blank stainless steel wall plate that incorporates a precision temperature sensor used to monitor room temperatures where additional security is required. Additional options are available that include manual override.

TYPICAL INSTALLATION

For complete installation and wiring details, please refer to the product installation instructions.

The TE200AS series can be flush mounted directly to a single gang electrical box or directly to a wall. Insulating foam is adhered to the back of the wall plate to provide a thermal barrier from internal wall temperatures.

A pigtail is used for connection to the Building Automation System.

SPECIFICATIONS

SENSOR TYPE	Various Thermistor or RTD
TEMPERATURE RANGE	-20 to 60°C (-4 to 140°F)
AMBIENT OPERATING RANGE	-20 to 60°C (-4 to 140°F)
ENCLOSURE	Stainless Steel - IP50 (NEMA 1)
DIMENSIONS	114.3mm L x 69.85mm W x 4.75mm D (4.5" x 2.75" x 0.1875")
TERMINATION	**Sensor Only:** Pigtail 2 or 3 wire **Sensor with Options:** Terminal Block
COUNTRY OF ORIGIN	Canada

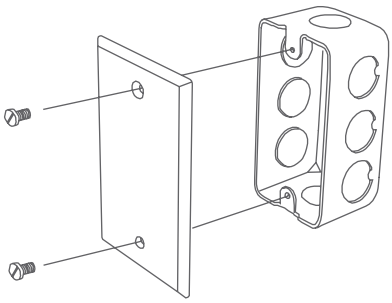

ORDERING

PRODUCT	**TE200AS**	Stainless Steel Room Temperature Sensor
SENSOR	**2**	100 Ω Platinum, IEC 751, 385 Alpha, thin film
	5	1801 Ω NTC Thermistor, ±0.2°C
	6	3000 Ω NTC Thermistor, ±0.2°C
	7	10,000 Ω Type 3, NTC Thermistor, ±0.2°C
	8	2.252K Ω NTC Thermistor, ±0.2°C
	12	1000 Ω Platinum, IEC 751, 385 Alpha, thin film
	13	1000 Ω Nickel, Class B, DIN 43760
	14	10,000 Ω Type 3, NTC Thermistor, ±0.2°C c/w 11K shunt resistor
	20	20,000 Ω NTC Thermistor, ±0.2°C
	24	10,000 Ω Type 2, NTC Thermistor, ±0.2°C
	59	10,000 Ω @ 25°C, ±1%, B = 3435 ±1% (25/85)
OPTIONS (MULTIPLE SELECTIONS CAN BE MADE)	**BS**	Exposed push button momentary switch - N.O.
	GB	Grayhill exposed push button - N.O., SPST, 3A
	LY	Yellow LED
	LR	Red LED
	LG	Green LED
	CJ	3.5mm Phono jack for remote system access
	TP	Tamperproof screws
	GS	Greystone Customized Version (TE200AD*GS***)

PART NUMBER

TE200AS

NOTE: Greystone Energy Systems, Inc. reserves the right to make design modifications without prior notice.

RoHS COMPLIANT

Greystone Energy Systems, Inc.
150 English Drive, Moncton,
New Brunswick, Canada E1E 4G7

Ph: +1 (506) 853-3057 Fax: +1 (506) 853-6014
North America: 1-800-561-5611
E-mail: mail@greystoneenergy.com

Copyright © Greystone Energy Systems Inc. All Rights Reserved